PicoCoreMX8 Heat Spreader
MHS.PC100.1
Datasheet

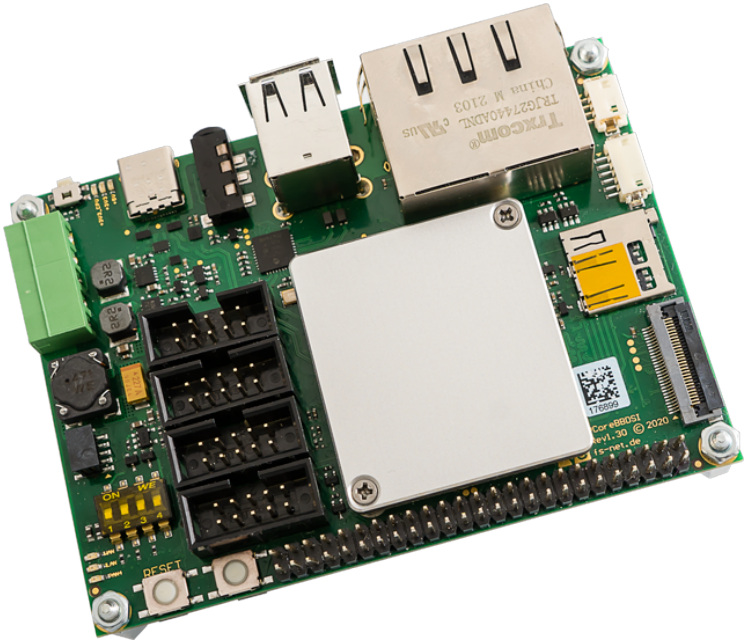

© F&S Elektronik Systeme GmbH
Untere Waldplätze 23
D-70569 Stuttgart
Phone: +49(0)711-123722-0
Fax: +49(0)711-123722

1 Table of contents

2 Change History 3
3 About this document 3
4 Technical Specifications 4
4.1 Heat Spreader & M2 Countersunk Screw 4
4.2 Thermal Interface Material (TIM) 5
5 Mechanical Dimensions 6
5.1 Mechanical Dimensions of Heat Spreader 6
5.2 Mechanical Dimensions of Thermal Interface Material (TIM) 7
6 Assembly procedure 8
7 Scope of delivery 12
8 Appendix 12

2 Change History

Version #	Changed Section	Author	Date	Change description
001		GI	26.10.2021	Initial Version

3 About this document

This document describes the individual components of article “MHS.PC100.1" on a technical and thermal level for the PicoCoreMX8.

4 Technical Specifications

4.1 Heat Spreader & M2 Countersunk Screw

Figure 2: Heat spreader TOP

Figure 1: Heat spreader BOTTOM

Heatspreader		Unit	Test Method	Remarks
Material	EN AW-6061	-		
Coating	Silver anodized	-		
Thermal conductivity	170-200	W/mK		@ 20°C
Weight	13	Grams		Heatspreader only
Thermal resistance	TBD	W/mK		
M2x8mm Countersunk screw	DIN 965 A2			

4.2 Thermal Interface Material (TIM)

Figure 3: Thermal Interface Pad

Thermal Interface Material (TIM)		Unit	Test Method	Remarks
Color	Grey	-	Visual	
Thermal conductivity	8	W/mK	ASTM D5470	
Dielectric Breakdown Voltage	6,0	kV/mm	ASTM D 149	
Volume Resistivity	2,9 x10^{11}	Ohm-cm	ASTM D 257	
Density	2,0	g / cm^3	ASTM D 792	
Tensile strength	782	PSI	ASTM D 412	
Continuous Use Temperature	-40 – 220	°C	EN 344	
Hardness Bulk Rubber	20	Shore C	ASTM D 2240	
Flame Rating	UL 94V-0	-	UL 94	

5 Mechanical Dimensions

5.1 Mechanical Dimensions of Heat Spreader

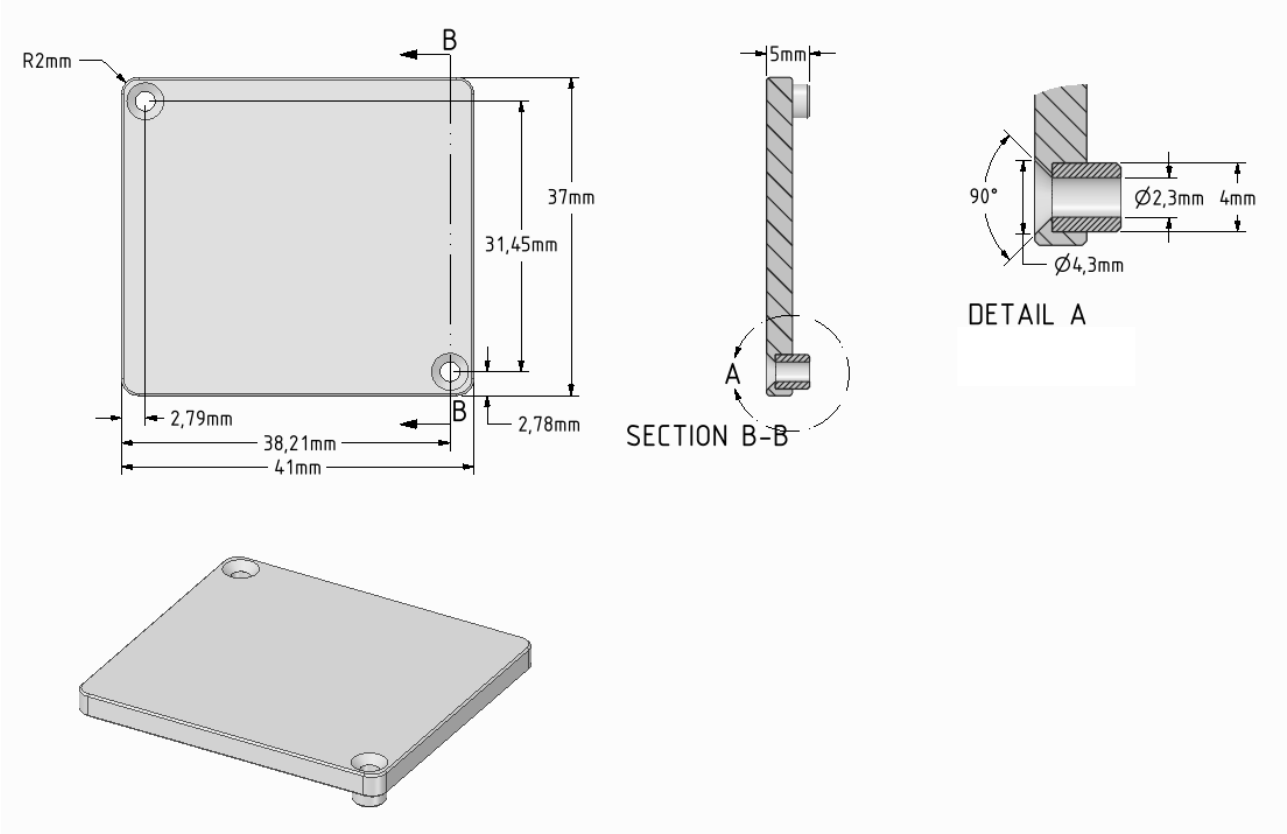

Figure 4: Mechanical dimensions of heat spreader

5.2 Mechanical Dimensions of Thermal Interface Material (TIM)

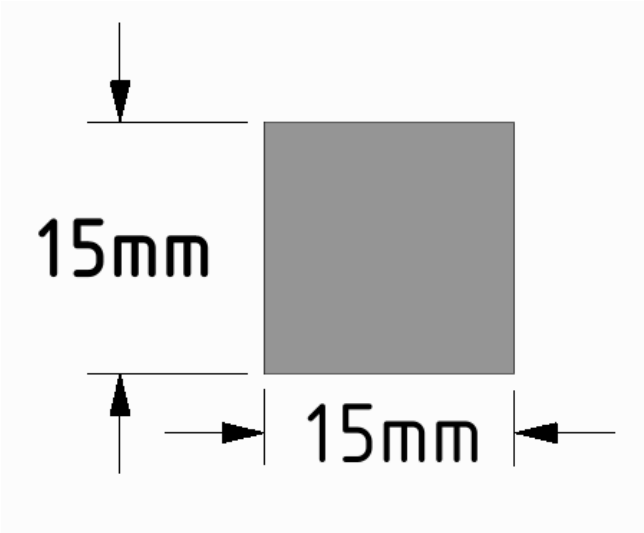

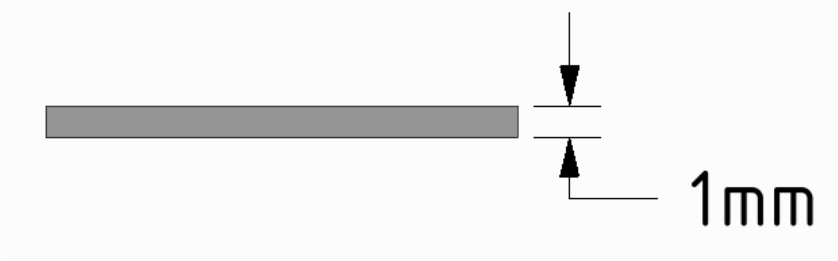

6 Assembly procedure

The assembly procedure needs to be done carefully since it can damage some small components on the CPU Board.
The Heatspreader is not electrically conductive but our recommendation is that it should be mounted while there is no power on the Baseboard and CPU Board.

The following pictures will demonstrate how to mount “MHS.PC100.1” with our PicoCoreBBDSI and a PicoCoreMX8MP.

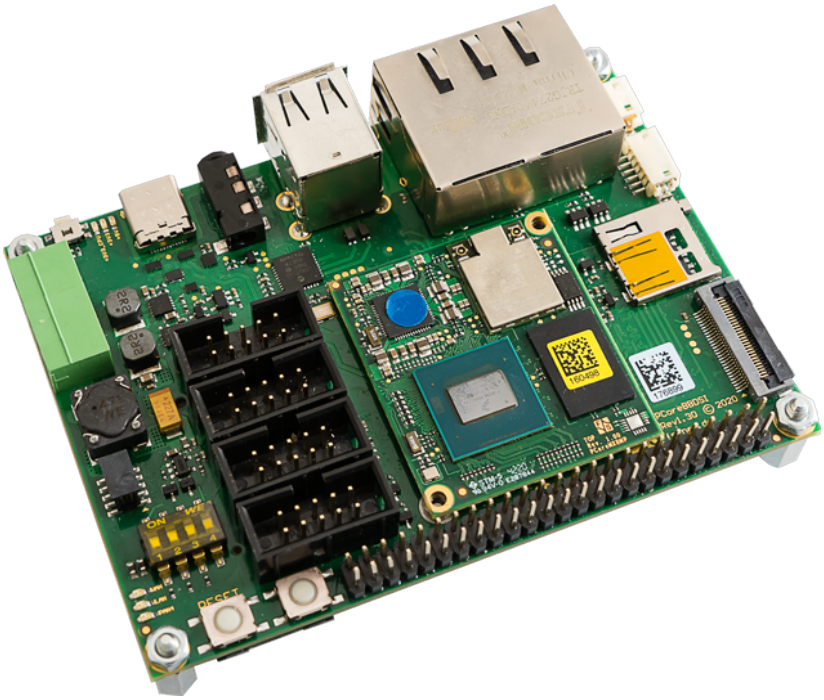

Figure 5: Example Board: PCoreBBDSI Rev1.30 & PCoreMX8MP Rev1.00

Step 1: Take off the foil on one side of the thermal pad

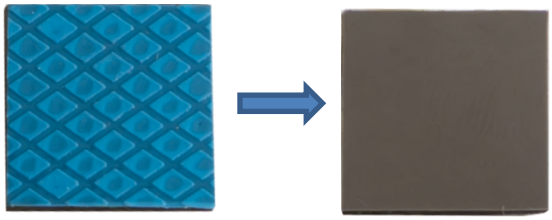

Figure 6: TIM

Step 2: Mount the thermal pad onto the CPU of the CPU-Board

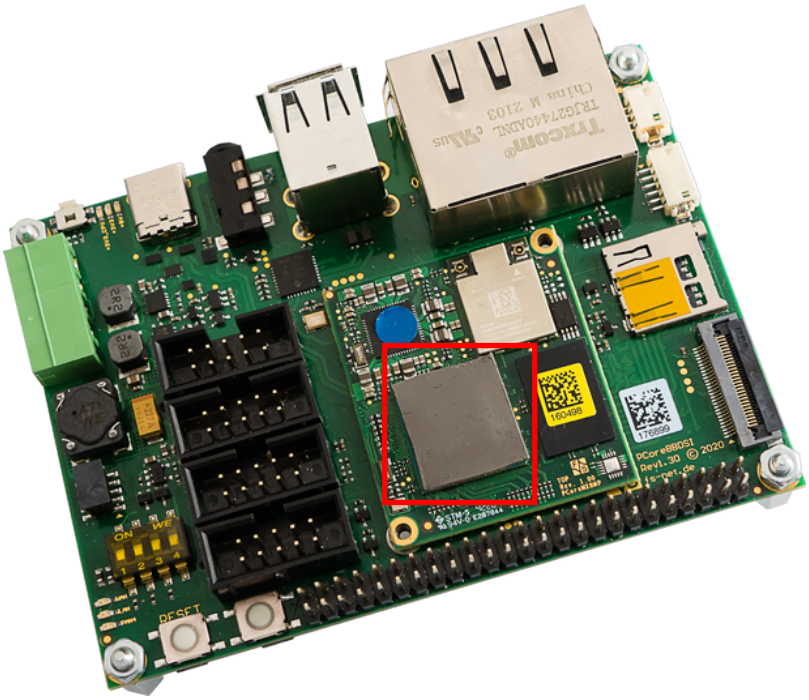

Figure 7: PCoreBBDSI & PCoreMX8MP & TIM with foil

Step 3: Take off the foil on the other side of the thermal pad

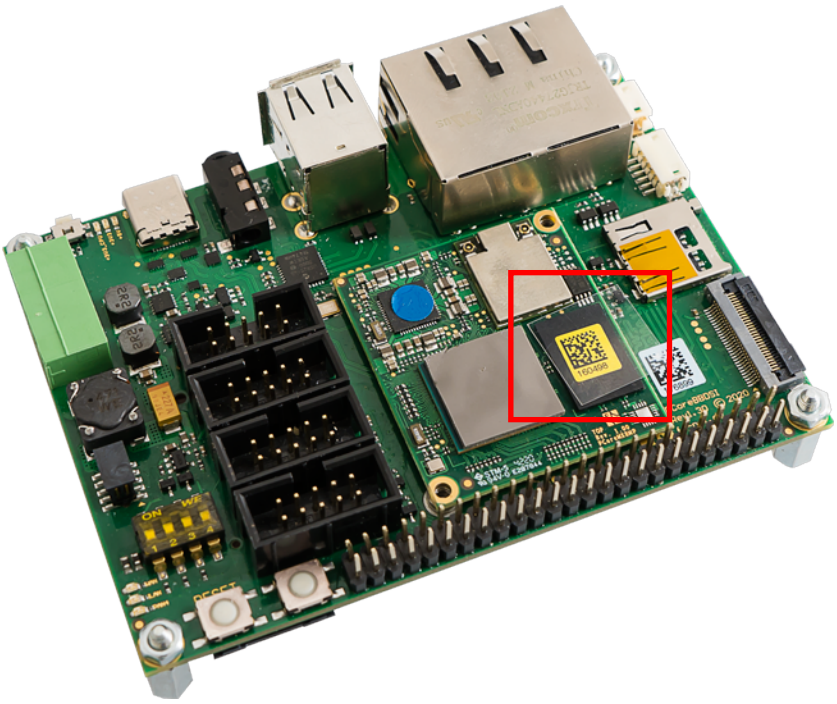

Figure 8: PicoCoreBBDSI & PicoCoreMX8MP & TIM without foil

Step 4: Place the Heatspreader aligned with the mounting holes

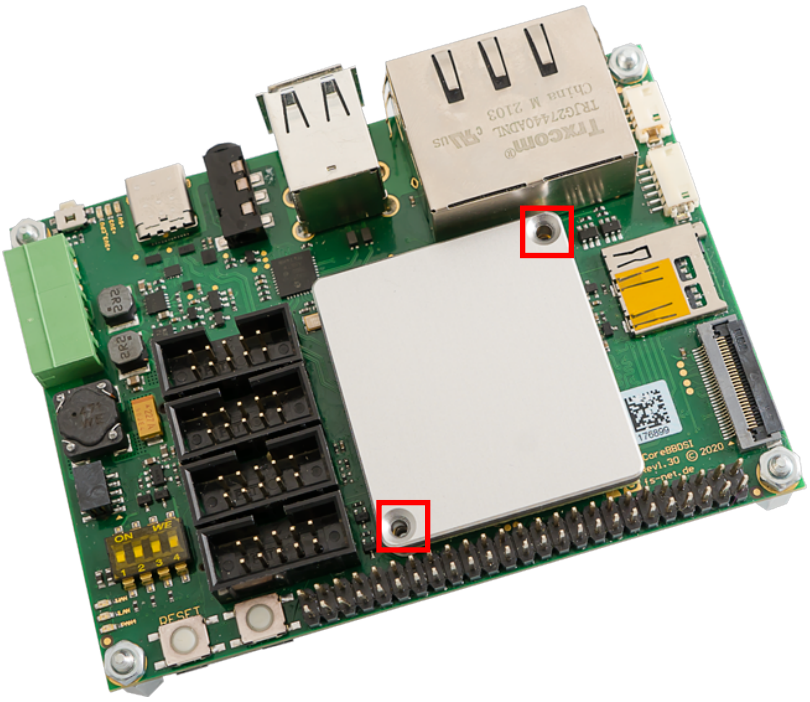

Figure 9: Placed Heat spreader

Step 5: Mount the heatspreader with the M2 countersunk screw

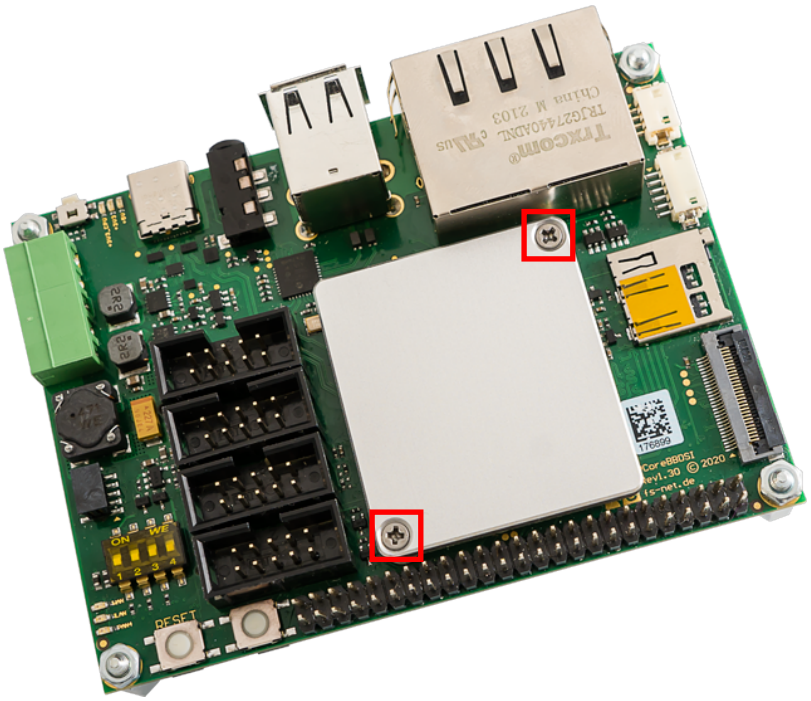

Figure 10: Mounted Heat spreader

7 Scope of delivery

MHS.PC100.1 contains 3 articles:

Article	Quantity
Heatspreader	1
TIM 14x14mm	1
M2x8mm, DIN 965 A2	2

8 Appendix

Important Notice

The information in this publication has been carefully checked and is believed to be entirely accurate at the time of publication. F&S Elektronik Systeme ("F&S") assumes no responsibility, however, for possible errors or omissions, or for any consequences resulting from the use of the information contained in this documentation.

F&S reserves the right to make changes in its products or product specifications or product documentation with the intent to improve function or design at any time and without notice and is not required to update this documentation to reflect such changes.

F&S makes no warranty or guarantee regarding the suitability of its products for any particular purpose, nor does F&S assume any liability arising out of the documentation or use of any product and specifically disclaims any and all liability, including without limitation any consequential or incidental damages.
Specific testing of all parameters of each device is not necessarily performed unless required by law or regulation.

Products are not designed, intended, or authorized for use as components in systems intended for applications intended to support or sustain life, or for any other application in which the failure of the product from F&S could create a situation where personal injury or death may occur. Should the Buyer purchase or use a F&S product for any such unintended or unauthorized application, the Buyer shall indemnify and hold F&S and its officers, employees, subsidiaries, affiliates, and distributors harmless against all claims, costs, damages, expenses, and reasonable attorney fees arising out of, either directly or indirectly, any claim of personal injury or death that may be associated with such unintended or unauthorized use, even if such claim alleges that F&S was negligent regarding the design or manufacture of said product.

Specifications are subject to change without notice.

Warranty Terms

Hardware Warranties

F&S guarantees hardware products against defects in workmanship and material for a period of one (1) year from the date of shipment. Your sole remedy and F&S's sole liability shall be for F&S, at its sole discretion, to either repair or replace the defective hardware product at no charge or to refund the purchase price. Shipment costs in both directions are the responsibility of the customer. This warranty is void if the hardware product has been altered or damaged by accident, misuse or abuse.

Software Warranties

Software is provided "AS IS". F&S makes no warranties, either express or implied, with regard to the software object code or software source code either or with respect to any third party materials or intellectual property obtained from third parties. F&S makes no warranty that the software is useable or fit for any particular purpose. This warranty replaces all other warranties written or unwritten. F&S expressly disclaims any such warranties. In no case shall F&S be liable for any consequential damages.

Disclaimer of Warranty

THIS WARRANTY IS MADE IN PLACE OF ANY OTHER WARRANTY, WHETHER EXPRESSED, OR IMPLIED, OF MERCHANTABILITY, FITNESS FOR A SPECIFIC PURPOSE, NON-INFRINGEMENT OR THEIR EQUIVALENTS UNDER THE LAWS OF ANY JURISDICTION, EXCEPT THE WARRANTY EXPRESSLY STATED HEREIN. THE REMEDIES SET FORTH HEREIN SHALL BE THE SOLE AND EXCLUSIVE REMEDIES OF ANY PURCHASER WITH RESPECT TO ANY DEFECTIVE PRODUCT.

Limitation on Liability

UNDER NO CIRCUMSTANCES SHALL F&S BE LIABLE FOR ANY LOSS, DAMAGE OR EXPENSE SUFFERED OR INCURRED WITH RESPECT TO ANY DEFECTIVE PRODUCT. IN NO EVENT SHALL F&S BE LIABLE FOR ANY INCIDENTAL OR CONSEQUENTIAL DAMAGES THAT YOU MAY SUFFER DIRECTLY OR INDIRECTLY FROM USE OF ANY PRODUCT. BY ORDERING THE PRODUCT, THE CUSTOMER APPROVES THAT THE F&S PRODUCT, HARDWARE AND SOFTWARE, WAS THOROUGHLY TESTED AND HAS -MET THE CUSTOMER'S REQUIREMETS AND SPECIFICATIONS